ANSWERS

Angles – Past Paper Questions

3. *(a)*

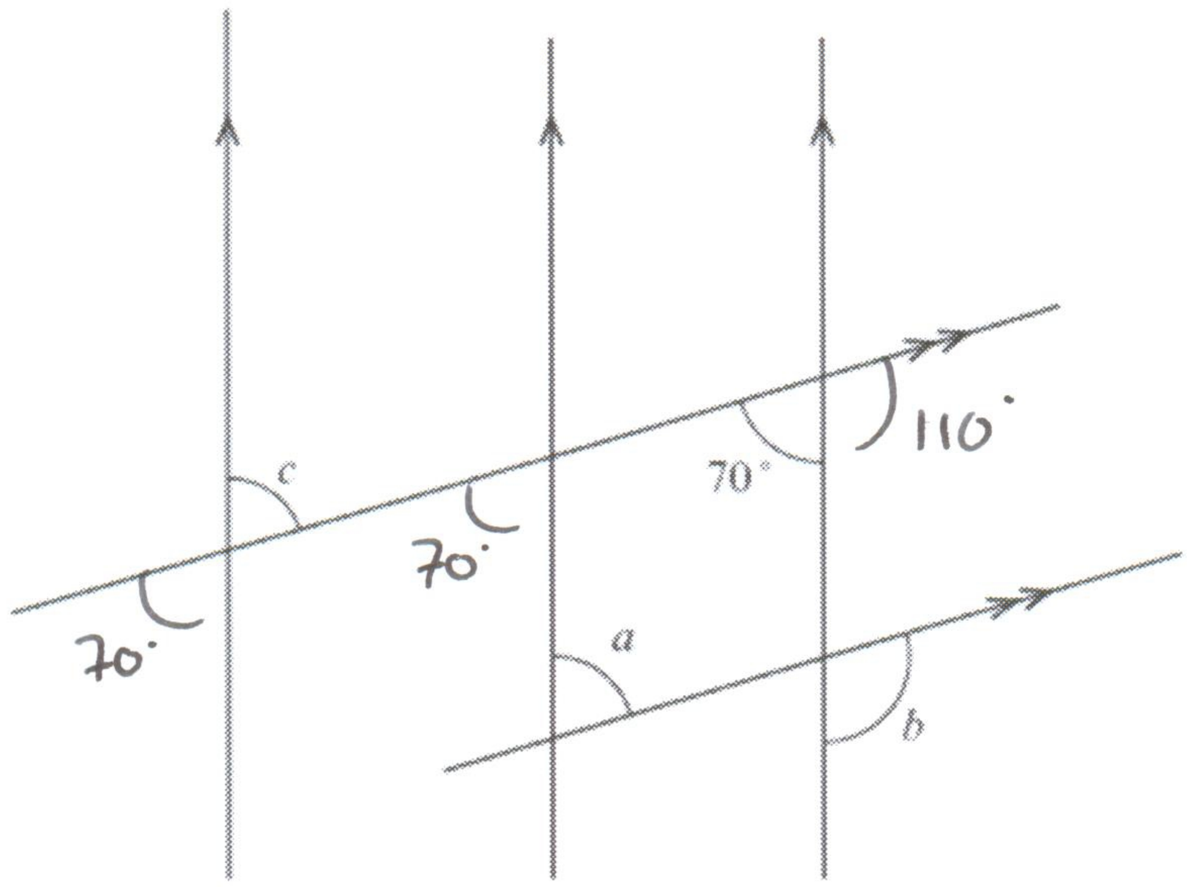

Diagram not drawn to scale

Find the size of each of the angles marked a, b and c.

$a =$ 70 ° (1) $b =$ 110 ° (1) $c =$ 70 ° (1)

[3]

(b) Calculate the size of the interior angle of a regular 10 sided polygon.

Exterior angles always 360° So:

360° ÷ 10 = 36° (1)

∴ Interior angle is 180° − 36° = 144° (1) (1)

[3]

3. *(a)*

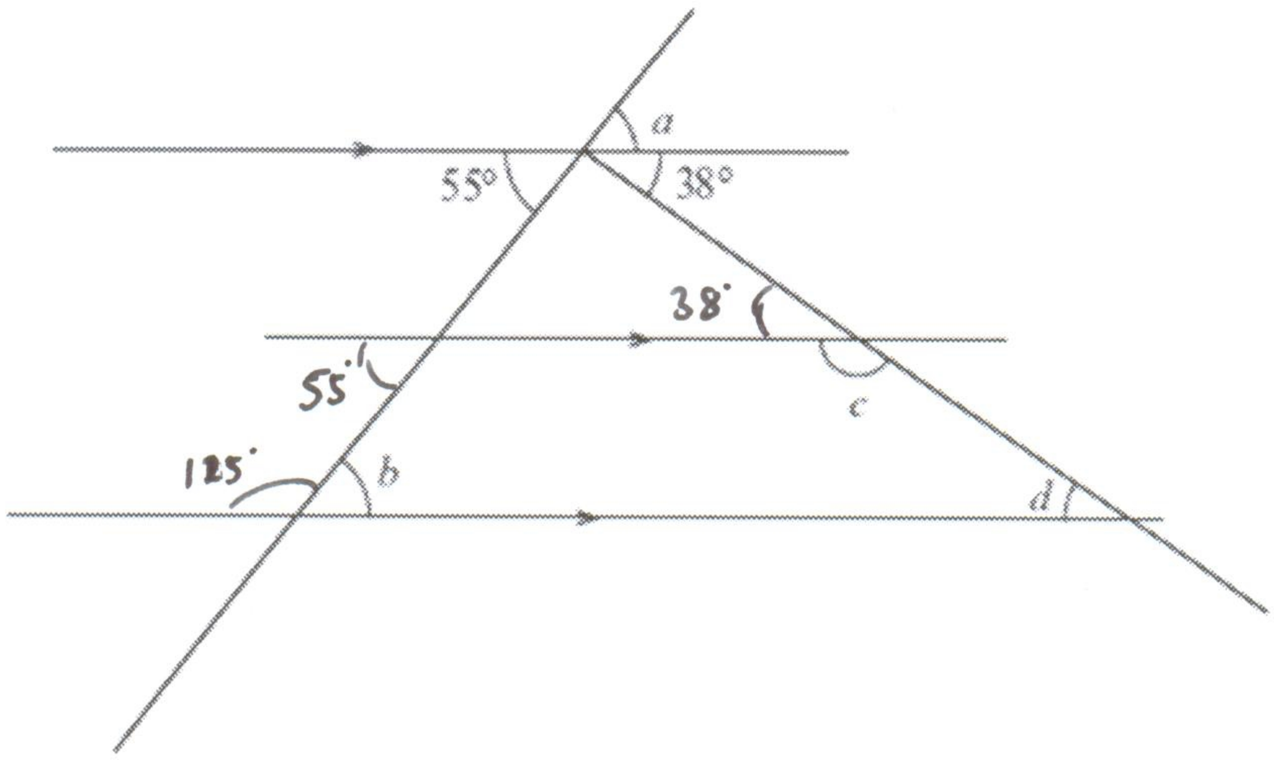

Diagram not drawn to scale

Find the size of each of the angles marked a, b, c and d.

$a =$ 55 ° (1) $b =$ 55 ° (1) $c =$ 142 ° (1) $d =$ 38° ° (1)

[4]

(c)

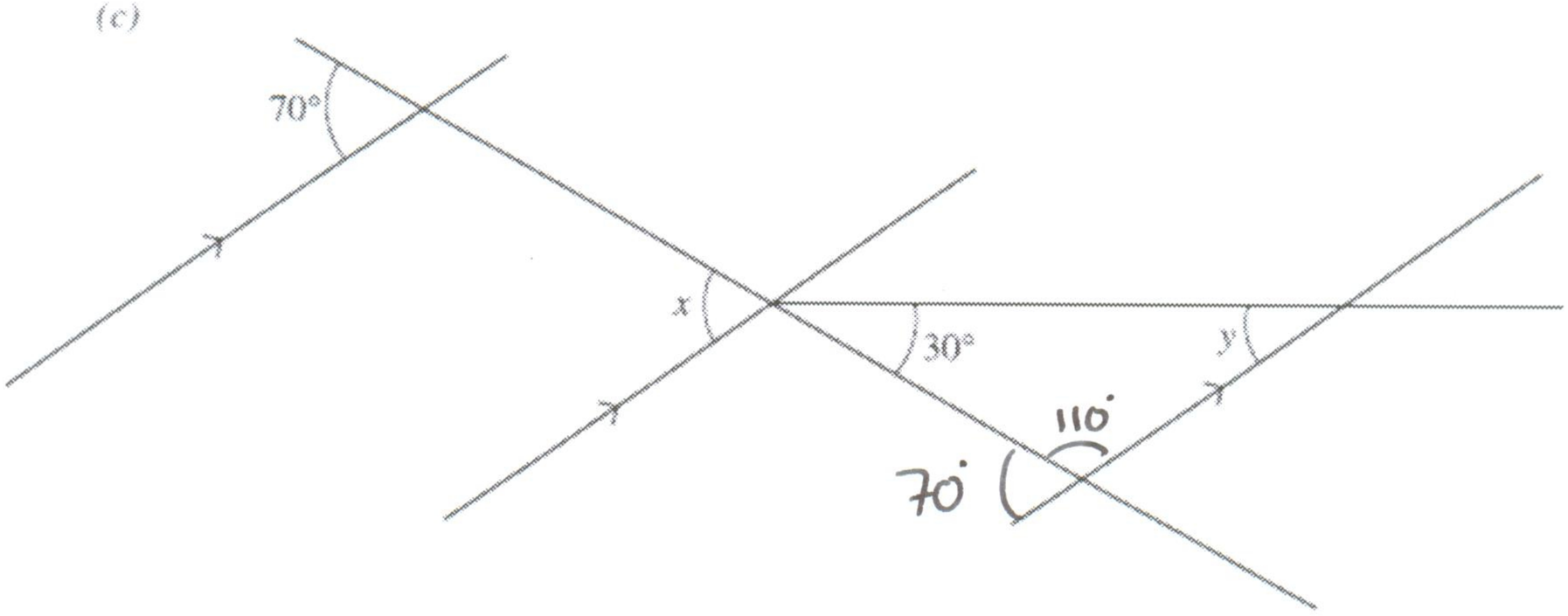

Diagram not drawn to scale.

Find the sizes of the angles marked x and y.

$x =$ 70 (1) ° $y =$ 40 (2) °

[3]

3.

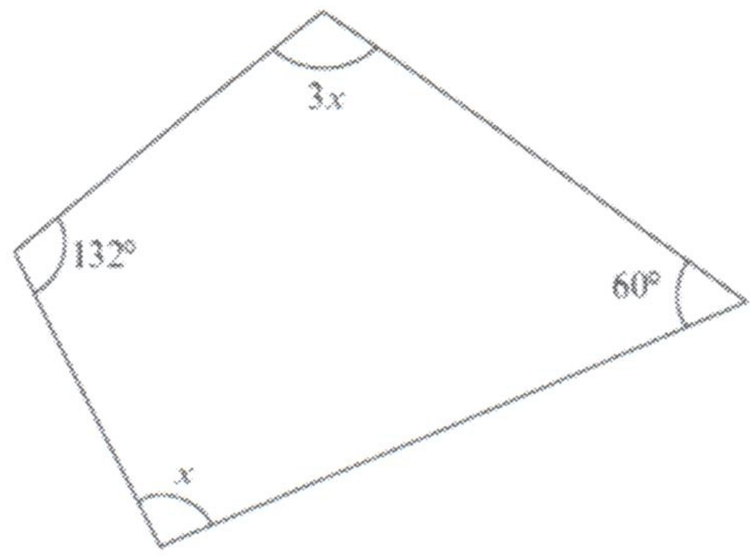

Diagram not drawn to scale

Calculate the value of x.

$3x + 132 + 60 + x = 360°$ (1)

$4x + 192 = 360$ (1)

$4x = 168$ (1)

$x = 42°$ (1)

[4]

3. (a)

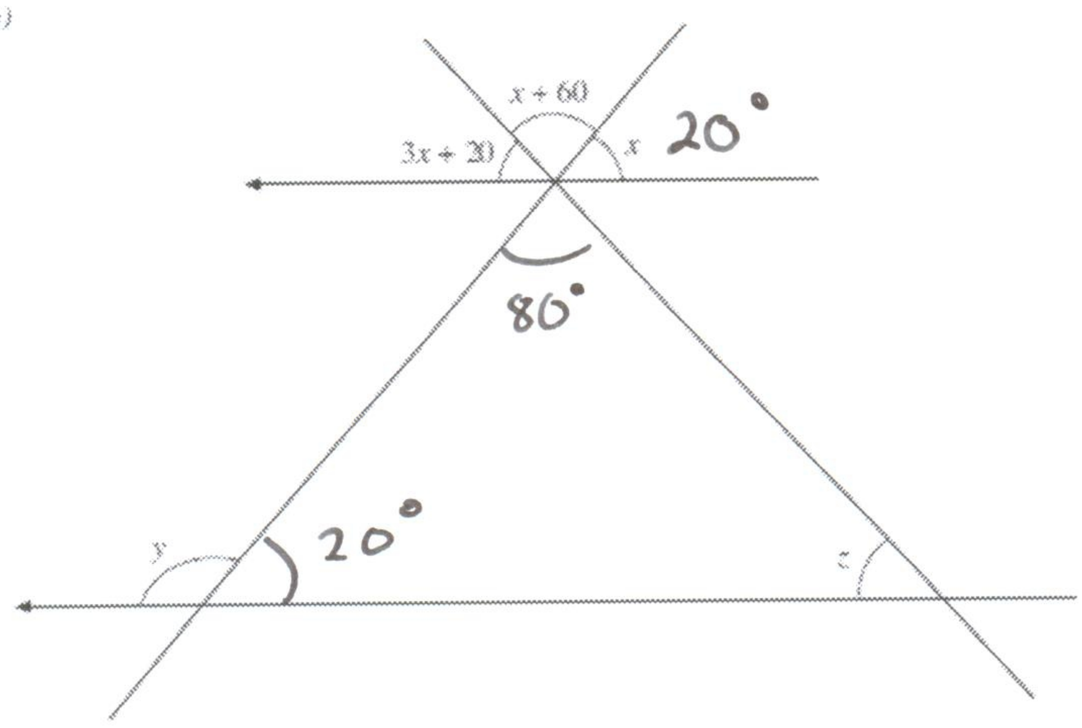

Diagram not drawn to scale.

All angles are measured in degrees.
Find the size of angles x, y and z.

$3x + 20 + x + 60 + x = 180$ (1)

$5x + 80 = 180$ (1)

$\therefore x = 20$

$x = 20°$ (1), $y = 160°$ (1), $z = 80°$ (1)

[5]